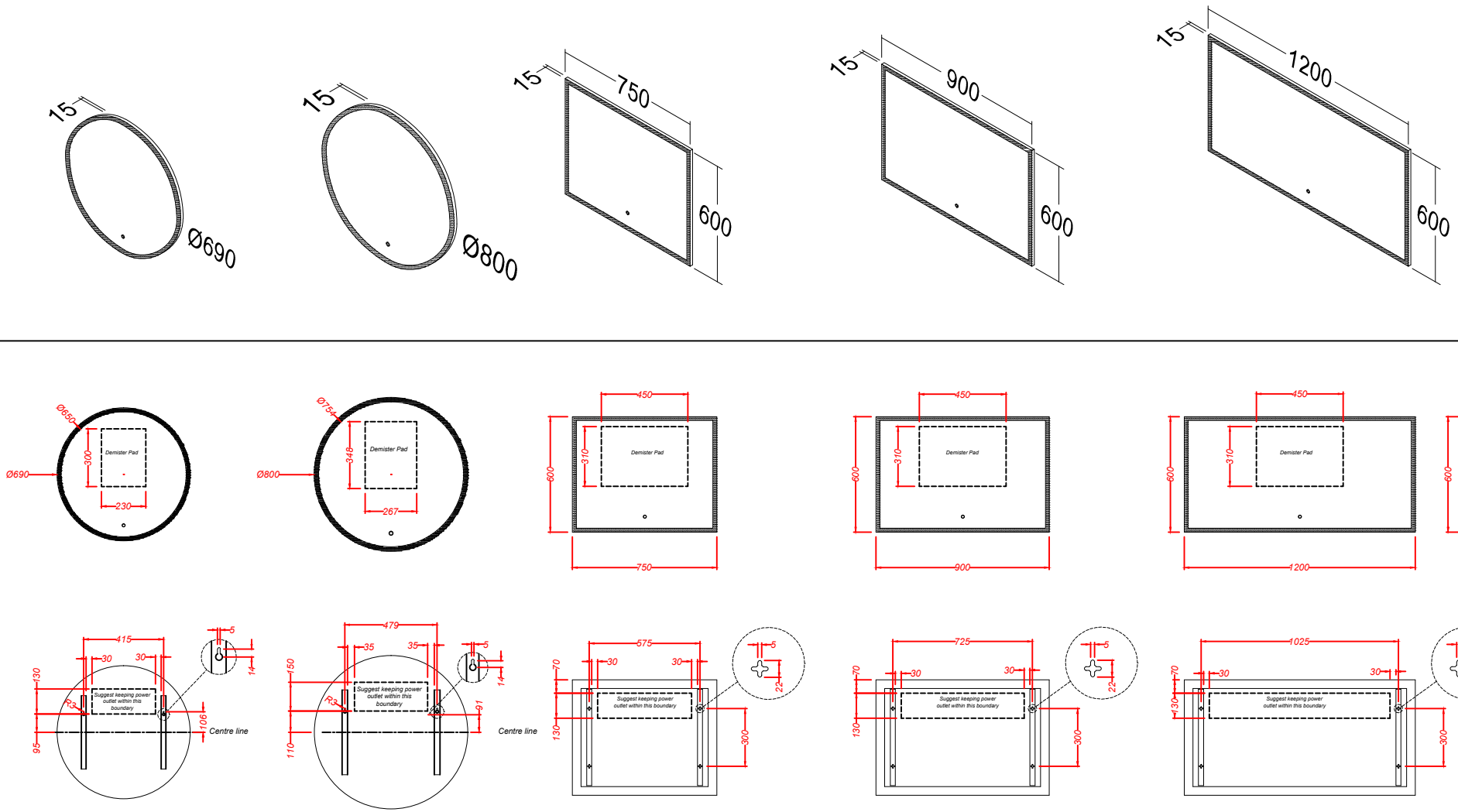

Rear Mounting Details - Use Template provided